Force Engineering & Testing
19530 Ramblewood Drive
Humble, Texas 77338
Phone: (281) 540-6603 FAX: (281) 540-9966
Website: www.forceengineeringtesting.com

Product Evaluation Report

E.F. BAVIS & ASSOCIATES, INC.

8' Fixed Trimless Window

Florida Product Approval # 6587.8 R8

Florida Building Code 2023
Per Rule 61G20-3
Method: 1 –D

Category: Windows
Subcategory: Fixed
Compliance Method: 61G20-3.005(1)(d)
HVHZ

Product Manufacturer:
E.F. Bavis & Associates, Inc.
201 Grandin Road
Maineville, Ohio 45039

Engineer Evaluator:
Johnathan Green, P.E. #88223
Florida Evaluation ANE ID: 12901

Contents:

Evaluation Report: Page 1 - 3
Installation Detail: Page 4 - 19

AUG 31 2023

JOHNATHAN GREEN
LICENSE
No. 88223
STATE OF
FLORIDA
PROFESSIONAL ENGINEER

THIS DOCUMENT HAS BEEN DIGITALLY SIGNED AND SEALED BY JOHNATHAN GREEN ON THE DATE ADJACENT TO THE SEAL.

PRINTED COPIES OF THIS DOCUMENT ARE NOT CONSIDERED SIGNED AND SEALED AND THE SIGNATURE MUST BE VERIFIED ON ANY ELECTRONIC COPIES.

Force Engineering & Testing
19530 Ramblewood Drive
Humble, Texas 77338
Phone: (281) 540-6603 FAX: (281) 540-9966
Website: www.forceengineeringtesting.com

Compliance Statement:	The product as described in this report has demonstrated compliance with the Florida Building Code 2023 including High Velocity Hurricane Zone.
Product Description:	8' Fixed Trimless Window Model #12103996.
Window Frame Size:	7'-4 3/8" wide x 2'-8 ¾" high x 6 ¾" deep
Window Frame:	Material: 14 Ga. ASTM A653 Grade 50, Galvannealed A60 Frame Coating: Nominal 3 mils Powder Coat
Glazing:	1 ¼" (nominal) thick bullet resistant glass. The glass consists of 3/32" annealed on interior face, 3/8" annealed, ½" annealed and ¼" annealed on the exterior side. A layer of 0.030" Kuraray Trosifol PVB is placed between each layer of glass.
Glazing Interlayer:	Kuraray America, Inc. 0.030" Kuraray Trosifol PVB Interlayer Miami Dade NOA NO: 23-0717.28
Window Frame Anchorage:	Header: Six fasteners equally spaced, 7 5/16" from each end then 14 ¾" O.C. Sill: Six fasteners located in pairs of two at 2" apart, 8 ¼" from each end and at center. Jamb: Three fasteners located 6", 17 ¼" and 28 ½" from bottom of frame for each jamb. All fasteners shall be corrosion resistance per Florida Building Code 2023.
Substrate:	Minimum 14 Ga. Stud framed opening or Minimum Grout filled C90 Concrete Block Nominal 8" or Minimum No 2 S.P.F. Wood frame Substrate must be designed in accordance w/ Florida Building Code 2023.
Anchor Edge Distance:	Minimum ¾" edge distance for 14 Ga. steel framing Minimum 3" edge distance for Grout filled C90 Concrete Block Nominal 8" Minimum 1 ¼" edge distance for No 2 S.P.F. Wood frame
Design Wind Pressures:	**+ / - 75.0 psf**

Force Engineering & Testing
19530 Ramblewood Drive
Humble, Texas 77338
Phone: (281) 540-6603 FAX: (281) 540-9966
Website: www.forceengineeringtesting.com

Performance Standards:

The product described herein has demonstrated compliance with:

- TAS 201-94: Large Missile Impact Test.
- TAS 202-94: Criteria for Testing Impact and Non-Impact Resistance Building Envelope Components Using Static Air Pressure.
- TAS 203-94: Criteria for Testing Products Subject to Cyclic Wind Pressure Loading.
- ASTM F588: Type D Hand & Tool Manipulation Test

Reference Data:

1. Test Reports T195-08
   Farabaugh Engineering & Testing, Inc.
2. Anchor Calculations
   Terrence E. Wolfe, P.E. # 44923
3. Certificate of Independence
   By Johnathan Green, P.E. (No. 88223) @ Force Engineering & Testing
   (FBC Organization # ANE ID: 12901)

Quality Assurance Entity:

The manufacturer has established compliance of roof panel products in accordance with the Florida Building Code and Rule 61G20-3.005 (3) for manufacturing under a quality assurance program audited by an approved quality assurance entity.

Installation:

Install per manufacturer's recommended details.

Design Procedure:

Based on the dimensions of the structure, appropriate wind loads are determined using Chapter 16 of the Florida Building Code 2023 for wall cladding wind loads. These component wind loads for wall cladding are compared to the allowable pressure listed above. The design professional shall select the appropriate erection details to reference in his drawings for proper fastener attachment to the structure. Support framing must be in compliance with Florida Building Code 2023.

DATE	ECN	REVISION RECORD	DR	CK
12/29/15	17010	UPDATE FILE NUMBER AND CODE VERSION	MC	MB
01/09/18	18733	UPDATE CODE VERSION	MC	MB
10/01/20	21503	UPDATE CODE VERSION	MC	MB
08/19/22	22749	REMOVE CRATE BASE FORM BOM	MC	DM
01/24/23	23579	UPDATE GLASS MANUFACTURER'S UL FILE NUMBER	MC	DM

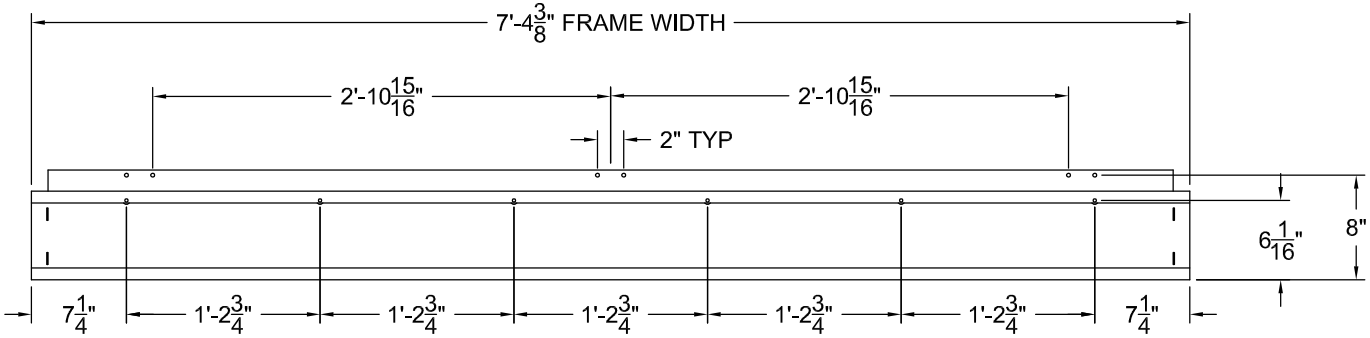

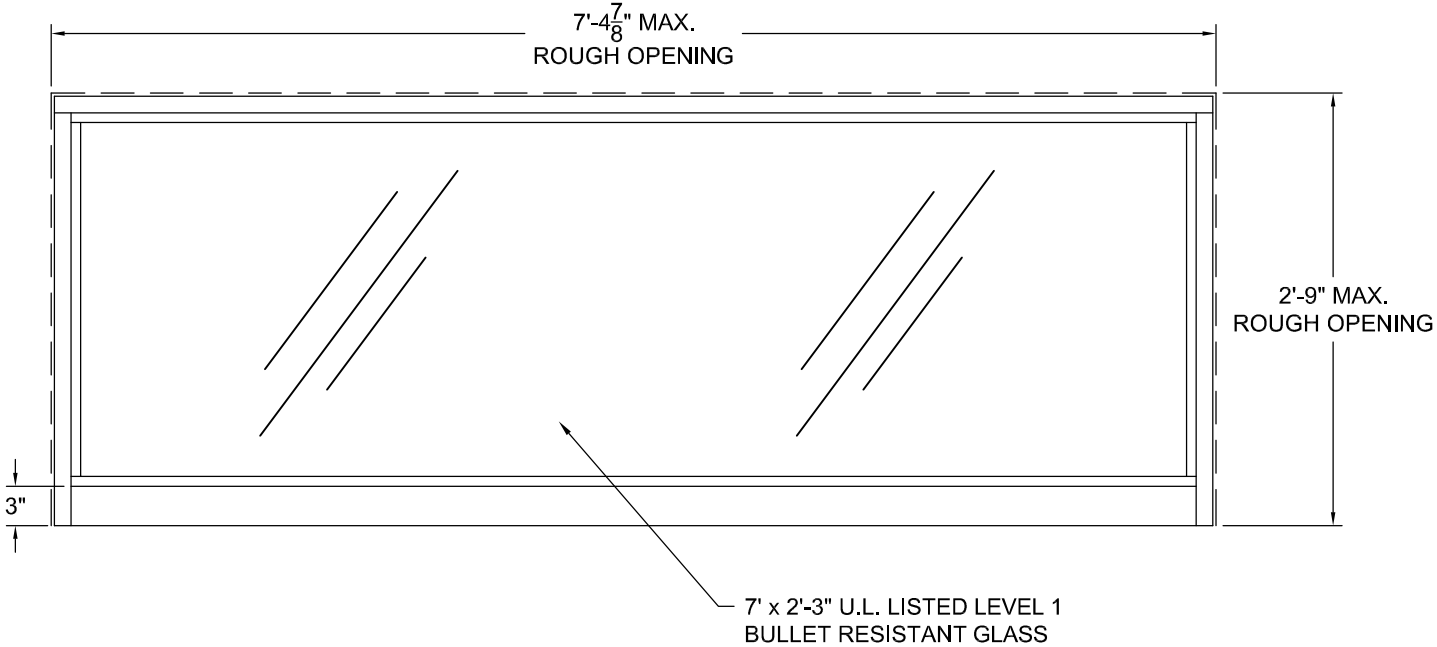

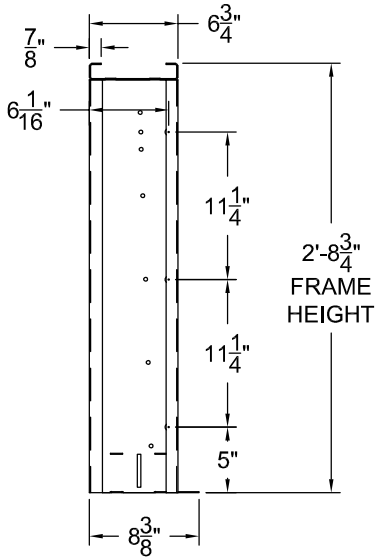

FOR INSTALLATION AND MOUNTING REQUIREMENTS,
GO TO THE FLORIDA BUILDING CODE WEBSITE AT:
http://www.floridabuilding.org/pr/pr_app_srch.aspx

SEARCH:
CODE VERSION: 2023
FL#: 6587

CATEGORY: WINDOWS
SUBCATEGORY: FIXED
APPLICATION STATUS: APPROVED

WINDOW MODEL #
12103996

PROPRIETARY
THIS DOCUMENTATION AND INFORMATION CONTAINED ARE THE SOLE PROPERTY OF E.F.BAVIS & ASSOC., INC. IT SHALL BE RETURNED UPON REQUEST AND SHALL NOT BE REPRODUCED IN WHOLE OR IN PART, OR DISCLOSED TO ANYONE ELSE, OR USED, WITHOUT WRITTEN CONSENT OF E.F. BAVIS & ASSOC., INC.

E.F.BAVIS & ASSOCIATES INC.
201 GRANDIN RD.
MAINEVILLE, OH 45039
T: 513-677-0500 F: 513-677-0552 E: info@bavis.com www.bavis.com

DIMENSIONS ARE IN FT & IN UNLESS OTHERWISE SPECIFIED

TITLE: HVHZ 8' TRIMLESS WINDOW

REVISED	DRAWN		SIZE	DRAWING NO.	SHEET
10/01/20	M. CRAVEN	12/29/15	A	12103996 DIM	1 OF 1

E.F.BAVIS & ASSOC. INC.
201 GRANDIN RD. P.O.BOX 337
MAINEVILLE, OH. 45039 0337
PH 513-677-0500 FAX 513-677-0552

UNLESS OTHERWISE SPECIFIED ALL DIMENSIONS ARE IN INCHES
DECIMALS: .XX + - .01 ; .XXX + - .005 FRACTIONS: + - 1/32; ANGLES: + - 30'
REMOVE ALL BURRS AND SHARP EDGES TO R .02 OR .02 X .02 CHAMFER MAX.

THIS DOCUMENTATION AND INFORMATION CONTAINED ARE THE SOLE PROPERTY OF E.F.BAVIS & ASSOC, INC. IT SHALL BE RETURNED UPON REQUEST AND SHALL NOT BE REPRODUCED IN WHOLE OR IN PART, OR DISCLOSED TO ANYONE ELSE, OR USED, WITHOUT WRITTEN CONSENT OF E.F.BAVIS & ASSOC, INC.

8' FIXED TRIMLESS WINDOW

MODEL	12103996	PAGE	1 OF 15
DWG.	8' WT-HUR	DATE CREATED: 01/24/05	BAP
REV. DATE:			

COPYRIGHT 1996,2002 E.F.Bavis & Assoc. Inc.

EXPLODED VIEW

ITEM	DESCRIPTION
1	VERTICAL FRAME
2	TOP FRAME
3	SILL LOWER
4	SILL UPPER
5	2-1/2" X 1/4" STEEL BAR, 56-1/4" LONG
6	FILLER PLUG, STEEL

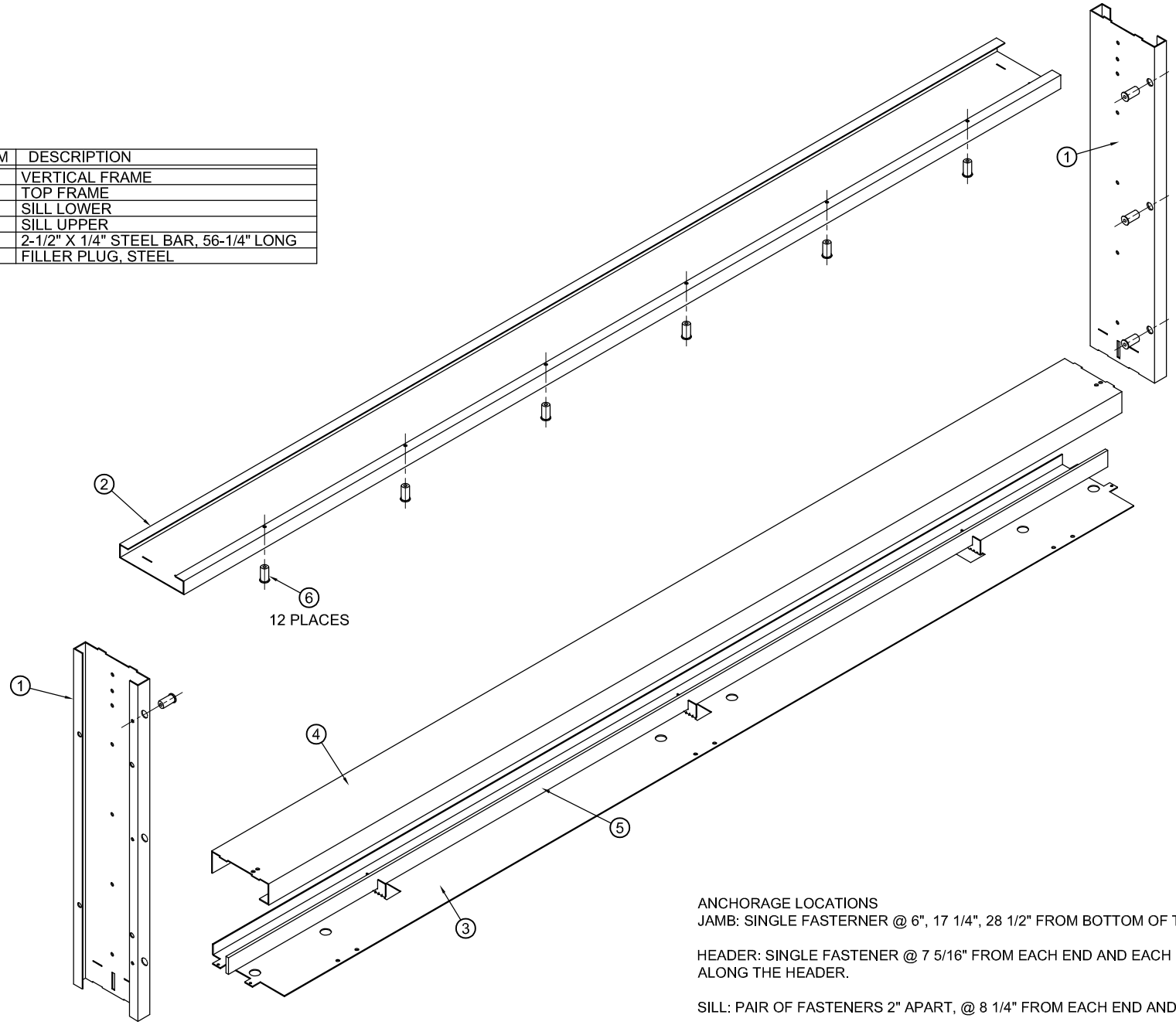

ANCHORAGE LOCATIONS
JAMB: SINGLE FASTERNER @ 6", 17 1/4", 28 1/2" FROM BOTTOM OF THE FRAME.

HEADER: SINGLE FASTENER @ 7 5/16" FROM EACH END AND EACH 14 3/4" C/C SPACING ALONG THE HEADER.

SILL: PAIR OF FASTENERS 2" APART, @ 8 1/4" FROM EACH END AND ONE PAIR IN CENTER.

E.F.BAVIS & ASSOC. INC.
201 GRANDIN RD. P.O.BOX 337
MAINEVILLE, OH. 45039 0337
PH 513-677-0500 FAX 513-677-0552

UNLESS OTHERWISE SPECIFIED ALL DIMENSIONS ARE IN INCHES
DECIMALS: .XX + - .01 ; .XXX + - .005 FRACTIONS: + - 1/32; ANGLES: + - 30'
REMOVE ALL BURRS AND SHARP EDGES TO R .02 OR .02 X .02 CHAMFER MAX.

THIS DOCUMENTATION AND INFORMATION CONTAINED ARE THE SOLE PROPERTY OF E.F.BAVIS & ASSOC, INC. IT SHALL BE RETURNED UPON REQUEST AND SHALL NOT BE REPRODUCED IN WHOLE OR IN PART, OR DISCLOSED TO ANYONE ELSE, OR USED, WITHOUT WRITTEN CONSENT OF E.F.BAVIS & ASSOC, INC.

8' FIXED TRIMLESS WINDOW

MODEL	12103996	PAGE 2 OF 15	
DWG.	8' WT-HUR	DATE CREATED: 01/24/05	BAP
REV. DATE:			

COPYRIGHT 1996,2002 E.F.Bavis & Assoc. Inc.

VERTICAL FRAME CROSS SECTION, FOR PLANT QUALITY CONTROL

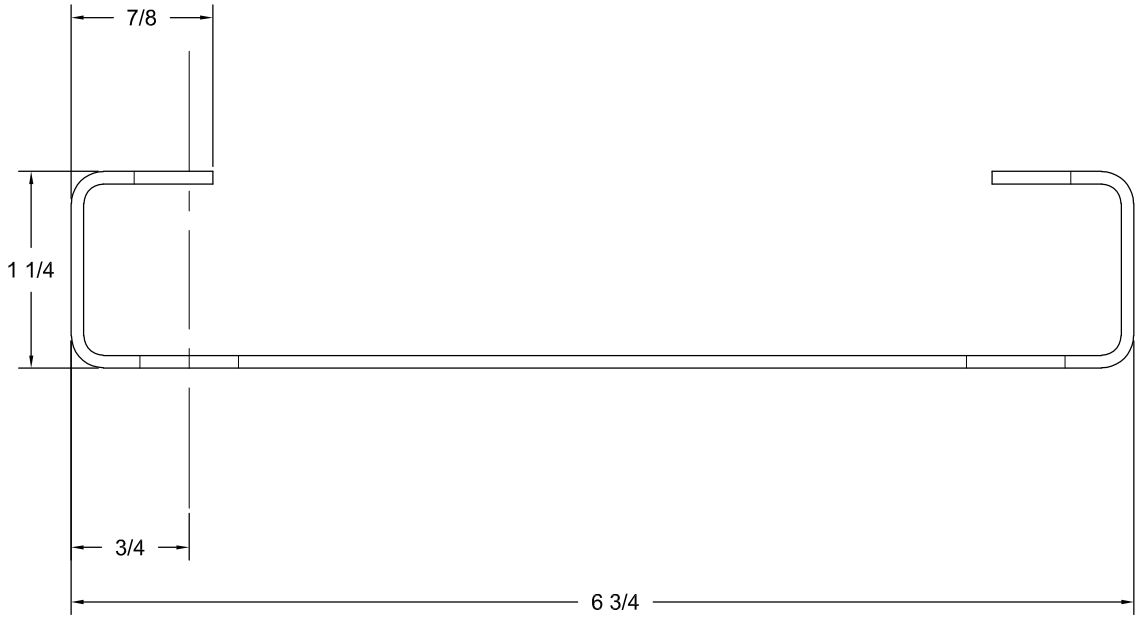

ITEM 1

MATERIAL: ASTM A653 .0785 (14 GAUGE) GALVANNEALED A60

E.F.BAVIS & ASSOC. INC.
201 GRANDIN RD. P.O.BOX 337
MAINEVILLE, OH. 45039 0337
PH 513-677-0500 FAX 513-677-0552

UNLESS OTHERWISE SPECIFIED ALL DIMENSIONS ARE IN INCHES
DECIMALS: .XX + - .01 ; .XXX + - .005 FRACTIONS: + - 1/32; ANGLES: + - 30'
REMOVE ALL BURRS AND SHARP EDGES TO R .02 OR .02 X .02 CHAMFER MAX.

THIS DOCUMENTATION AND INFORMATION CONTAINED ARE THE SOLE PROPERTY OF E.F.BAVIS & ASSOC, INC. IT SHALL BE RETURNED UPON REQUEST AND SHALL NOT BE REPRODUCED IN WHOLE OR IN PART, OR DISCLOSED TO ANYONE ELSE, OR USED, WITHOUT WRITTEN CONSENT OF E.F.BAVIS & ASSOC, INC.

8' FIXED TRIMLESS WINDOW

MODEL	12103996	PAGE	3 OF 15
DWG.	8' WT-HUR	DATE CREATED:	01/24/05 BAP
REV. DATE:			

COPYRIGHT 1996,2002 E.F.Bavis & Assoc. Inc.

TOP FRAME CROSS SECTION, FOR PLANT QUALITY CONTROL

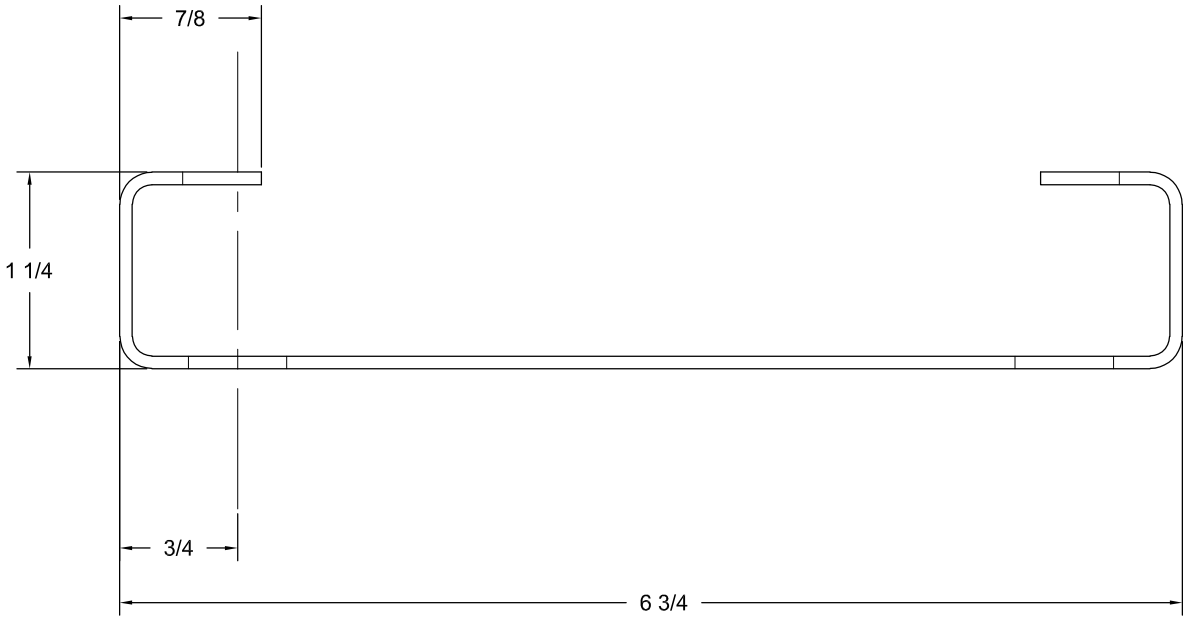

ITEM - 2

MATERIAL: ASTM A653 .0785 (14 GAUGE) GALVANNEALED A60

E.F.BAVIS & ASSOC. INC.
201 GRANDIN RD. P.O.BOX 337
MAINEVILLE, OH. 45039 0337
PH 513-677-0500 FAX 513-677-0552

UNLESS OTHERWISE SPECIFIED ALL DIMENSIONS ARE IN INCHES
DECIMALS: .XX + - .01 ; .XXX + - .005 FRACTIONS: + - 1/32; ANGLES: + - 30'
REMOVE ALL BURRS AND SHARP EDGES TO R .02 OR .02 X .02 CHAMFER MAX.

THIS DOCUMENTATION AND INFORMATION CONTAINED ARE THE SOLE PROPERTY OF E.F.BAVIS & ASSOC, INC. IT SHALL BE RETURNED UPON REQUEST AND SHALL NOT BE REPRODUCED IN WHOLE OR IN PART, OR DISCLOSED TO ANYONE ELSE, OR USED, WITHOUT WRITTEN CONSENT OF E.F.BAVIS & ASSOC, INC.

8' FIXED TRIMLESS WINDOW

MODEL	12103996	PAGE 4 OF 15	
DWG.	8' WT-HUR	DATE CREATED: 01/24/05	BAP
REV. DATE:			

COPYRIGHT 1996,2002 E.F.Bavis & Assoc. Inc.

LOWER SILL CROSS SECTION, FOR PLANT QUALITY CONTROL

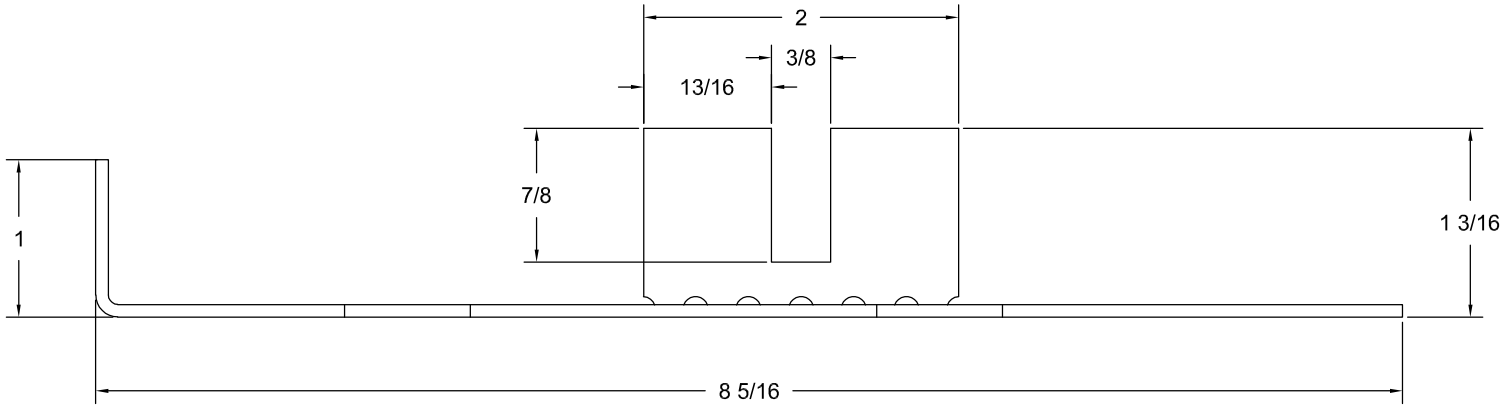

ITEM - 3

MATERIAL: ASTM A653 .0785 (14 GAUGE) GALVANNEALED A60

FL 6587.8 R8

E.F.BAVIS & ASSOC. INC.
201 GRANDIN RD. P.O.BOX 337
MAINEVILLE, OH. 45039 0337
PH 513-677-0500 FAX 513-677-0552

UNLESS OTHERWISE SPECIFIED ALL DIMENSIONS ARE IN INCHES
DECIMALS: .XX + - .01 ; .XXX + - .005 FRACTIONS: + - 1/32; ANGLES: + - 30'
REMOVE ALL BURRS AND SHARP EDGES TO R .02 OR .02 X .02 CHAMFER MAX.

THIS DOCUMENTATION AND INFORMATION CONTAINED ARE THE SOLE PROPERTY OF E.F.BAVIS & ASSOC. INC. IT SHALL BE RETURNED UPON REQUEST AND SHALL NOT BE REPRODUCED IN WHOLE OR IN PART, OR DISCLOSED TO ANYONE ELSE, OR USED, WITHOUT WRITTEN CONSENT OF E.F.BAVIS & ASSOC. INC.

8' FIXED TRIMLESS WINDOW

MODEL	12103996	PAGE 5 OF 15	
DWG.	8' WT-HUR	DATE CREATED: 01/24/05	BAP
REV. DATE:			

COPYRIGHT 1996,2002 E.F.Bavis & Assoc. Inc.

UPPER SILL CROSS SECTION, FOR PLANT QUALITY CONTROL

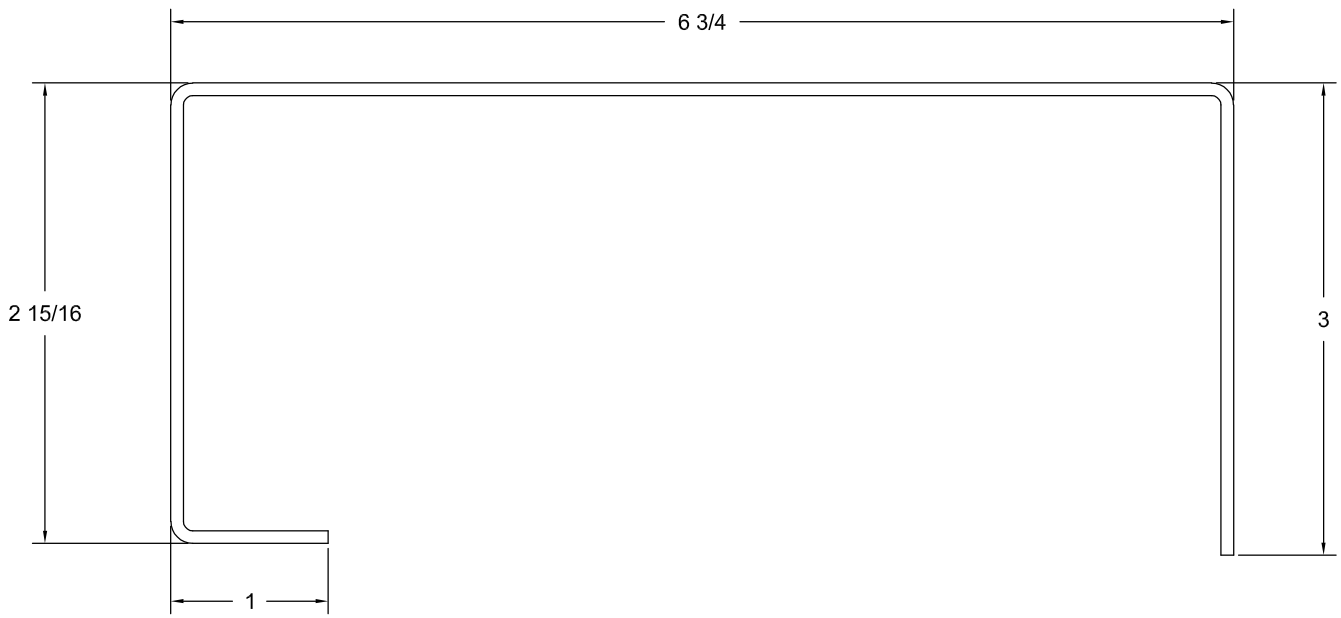

ITEM - 4

MATERIAL: ASTM A653 .0785 (14 GAUGE) GALVANNEALED A60

E.F.BAVIS & ASSOC. INC.
201 GRANDIN RD. P.O.BOX 337
MAINEVILLE, OH. 45039 0337
PH 513-677-0500 FAX 513-677-0552

UNLESS OTHERWISE SPECIFIED ALL DIMENSIONS ARE IN INCHES
DECIMALS: .XX + - .01 ; .XXX + - .005 FRACTIONS: + - 1/32; ANGLES: + - 30'
REMOVE ALL BURRS AND SHARP EDGES TO R .02 OR .02 X .02 CHAMFER MAX.

THIS DOCUMENTATION AND INFORMATION CONTAINED ARE THE SOLE PROPERTY OF E.F.BAVIS & ASSOC, INC. IT SHALL BE RETURNED UPON REQUEST AND SHALL NOT BE REPRODUCED IN WHOLE OR IN PART, OR DISCLOSED TO ANYONE ELSE, OR USED, WITHOUT WRITTEN CONSENT OF E.F.BAVIS & ASSOC, INC.

8' FIXED TRIMLESS WINDOW

MODEL	12103996	PAGE 6 OF 15	
DWG.	8' WT-HUR	DATE CREATED: 01/24/05	BAP
REV. DATE:			

COPYRIGHT 1996,2002 E.F.Bavis & Assoc. Inc.

WINDOW FILLER PLUG, FOR PLANT QUALITY CONTROL

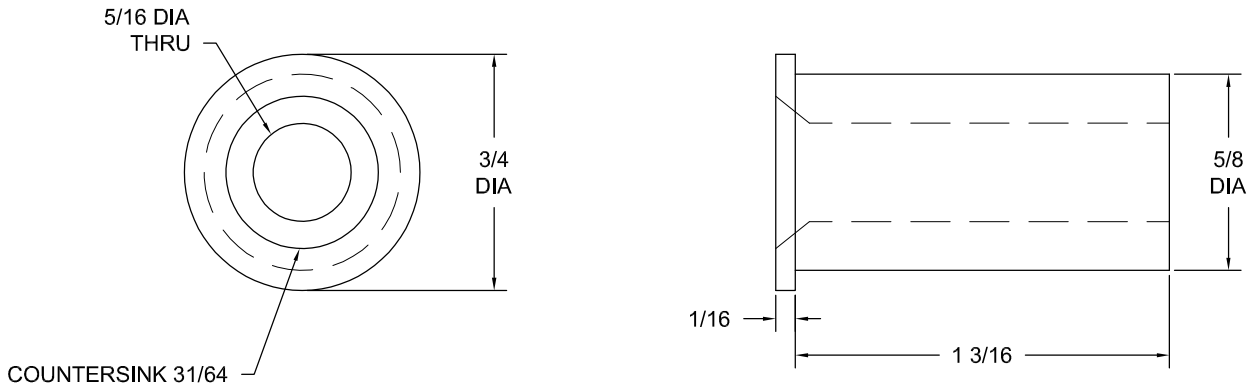

ITEM - 5

MATERIAL: 12L14 STEEL

E.F.BAVIS & ASSOC. INC.
201 GRANDIN RD. P.O.BOX 337
MAINEVILLE, OH. 45039 0337
PH 513-677-0500 FAX 513-677-0552

UNLESS OTHERWISE SPECIFIED ALL DIMENSIONS ARE IN INCHES
DECIMALS: .XX + - .01 ; .XXX + - .005 FRACTIONS: + - 1/32; ANGLES: + - 30'
REMOVE ALL BURRS AND SHARP EDGES TO R .02 OR .02 X .02 CHAMFER MAX.

THIS DOCUMENTATION AND INFORMATION CONTAINED ARE THE SOLE PROPERTY OF E.F.BAVIS & ASSOC, INC. IT SHALL BE RETURNED UPON REQUEST AND SHALL NOT BE REPRODUCED IN WHOLE OR IN PART, OR DISCLOSED TO ANYONE ELSE, OR USED, WITHOUT WRITTEN CONSENT OF E.F.BAVIS & ASSOC, INC.

8' FIXED TRIMLESS WINDOW

MODEL	12103996	PAGE	7 OF 15
DWG.	8' WT-HUR	DATE CREATED:	01/24/05 BAP
REV. DATE:	04/11/14	MJC	COPYRIGHT 1996,2002 E.F.Bavis & Assoc. Inc.

WINDOW WELDMENT DETAIL, FOR PLANT QUALITY CONTROL

NO.	ECN
1	15314

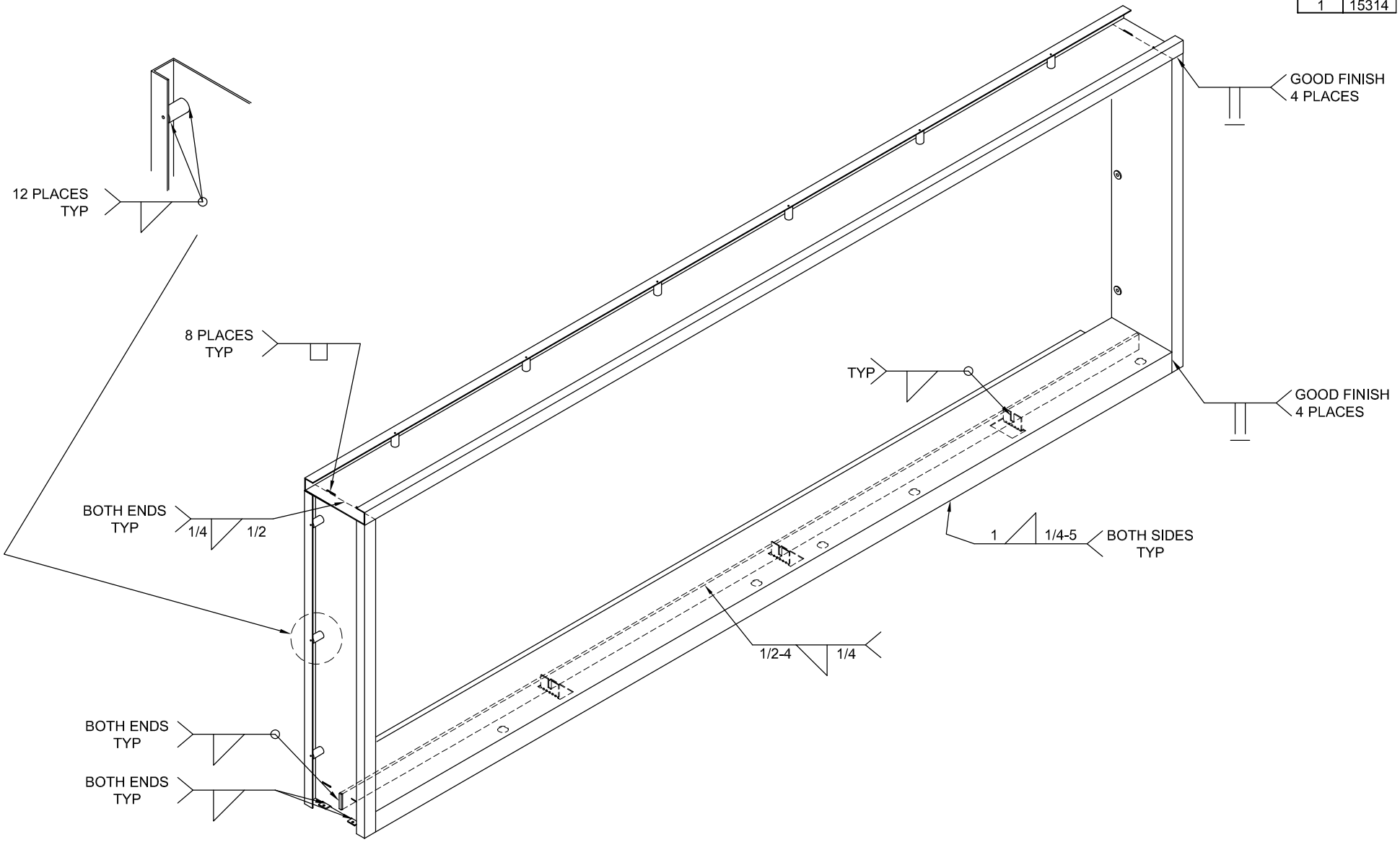

FL 6587.8 R8

E.F.BAVIS & ASSOC. INC.
201 GRANDIN RD. P.O.BOX 337
MAINEVILLE, OH. 45039 0337
PH 513-677-0500 FAX 513-677-0552

UNLESS OTHERWISE SPECIFIED ALL DIMENSIONS ARE IN INCHES
DECIMALS: .XX + - .01 ; .XXX + - .005 FRACTIONS: + - 1/32; ANGLES: + - 30'
REMOVE ALL BURRS AND SHARP EDGES TO R .02 OR .02 X .02 CHAMFER MAX.

THIS DOCUMENTATION AND INFORMATION CONTAINED ARE THE SOLE PROPERTY OF E.F.BAVIS & ASSOC. INC. IT SHALL BE RETURNED UPON REQUEST AND SHALL NOT BE REPRODUCED IN WHOLE OR IN PART, OR DISCLOSED TO ANYONE ELSE, OR USED, WITHOUT WRITTEN CONSENT OF E.F.BAVIS & ASSOC, INC.

8' FIXED TRIMLESS WINDOW

MODEL	12103996	PAGE	8 OF 15
DWG.	8' WT-HUR	DATE CREATED: 01/24/05	BAP
		DATE CREATED: 08/21/12	MJC
REV. DATE:	08/10/17	MJC	COPYRIGHT 1996,2002 E.F.Bavis & Assoc. Inc.

UNINSULATED GLASS WINDOW GLAZING DETAIL, FOR PLANT QUALITY CONTROL

ITEM	DESCRIPTION
1	VERTICAL FRAME
2	3/4" X 3/4" ALUMINUM EXTRUSION
3	UL LISTED 78CL, LEVEL 1 BULLET RESISTANT GLASS
	STANDARD MAKE-UP: 1/4" ANNEALED, 1/2" ANNEALED, 3/8" ANNEALED & 3/32" ANNEALED GLASS WITH 0.030" KURARAY TROSIFOL PVB (POLYVINYL BUTYRAL) INTERLAYERS
	INSULATED MAKE-UP: 1/4" ANNEALED, 1/4" AIR SPACE, 1/4" ANNEALED,1/2" ANNEALED, 3/8" ANNEALED & 3/32" ANNEALED GLASS WITH 0.030" KURARAY TROSIFOL PVB (POLYVINYL BUTYRAL) INTERLAYERS
4	1" X 4" X 3/16" THICK, RUBBER SETTING BLOCK
5	1/16" BUTYL TAPE, TREMCO 7242YA1760
6	1/4-20 X 1/2" PHILIPS TRUSS HEAD, ZINC COATED
7	#8-32 X 1" SPANNER FLAT HEAD, STAINLESS STEEL
8	CRL POLYURETHANE CONSTRUCTION SEALANT, CAT. NO. M64

NO.	ECN
1	18554
2	23579

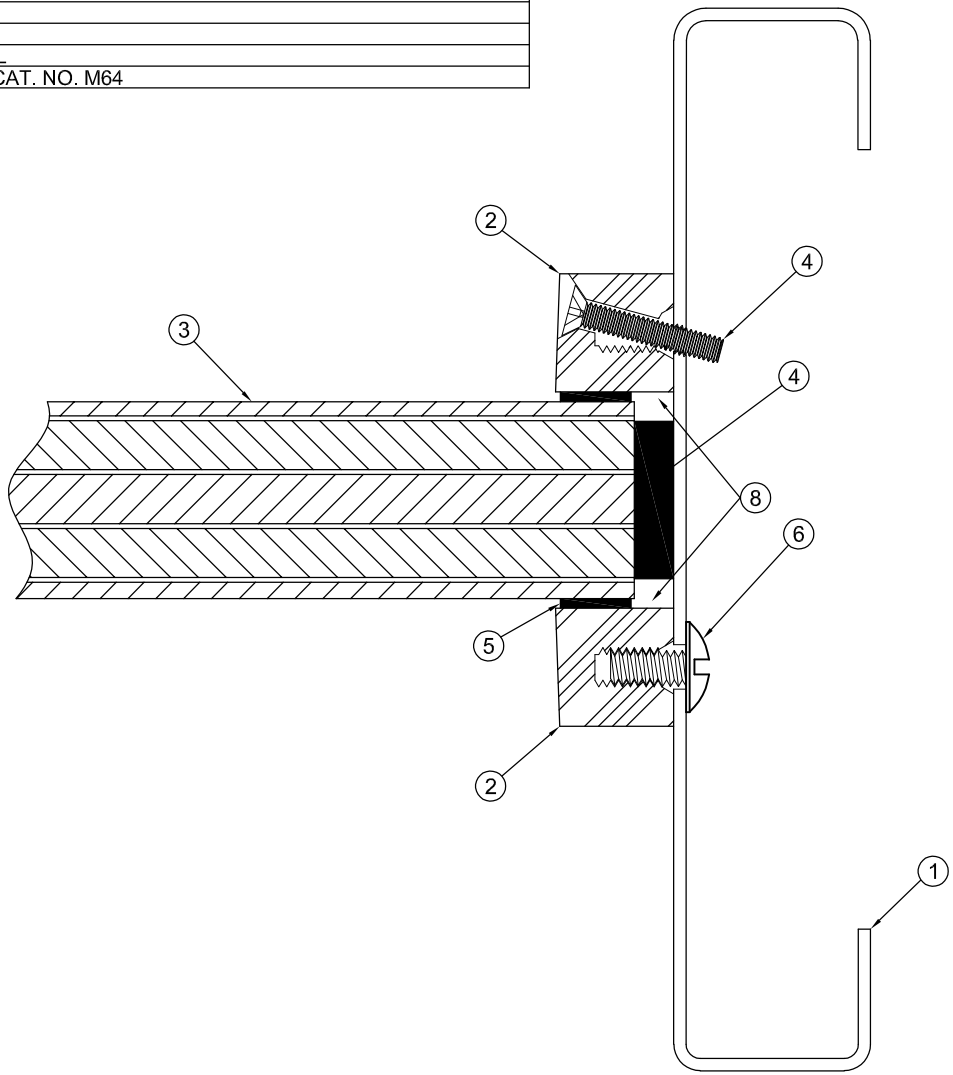

FL 6587.8 R8

E.F.BAVIS & ASSOC. INC.
201 GRANDIN RD. P.O.BOX 337
MAINEVILLE, OH. 45039 0337
PH 513-677-0500 FAX 513-677-0552

UNLESS OTHERWISE SPECIFIED ALL DIMENSIONS ARE IN INCHES
DECIMALS: .XX + - .01 ; .XXX + - .005 FRACTIONS: + - 1/32; ANGLES: + - 30'
REMOVE ALL BURRS AND SHARP EDGES TO R .02 OR .02 X .02 CHAMFER MAX.

THIS DOCUMENTATION AND INFORMATION CONTAINED ARE THE SOLE PROPERTY OF E.F.BAVIS & ASSOC. INC. IT SHALL BE RETURNED UPON REQUEST AND SHALL NOT BE REPRODUCED IN WHOLE OR IN PART, OR DISCLOSED TO ANYONE ELSE, OR USED, WITHOUT WRITTEN CONSENT OF E.F.BAVIS & ASSOC, INC.

8' FIXED TRIMLESS WINDOW

MODEL	12103996	PAGE	9 OF 15
DWG.	8' WT-HUR	DATE CREATED:	01/24/05 BAP
REV. DATE:			

COPYRIGHT 1996,2002 E.F.Bavis & Assoc. Inc.

FASTENER INSTALLATION DETAIL: MASONRY, HEAD & JAMB

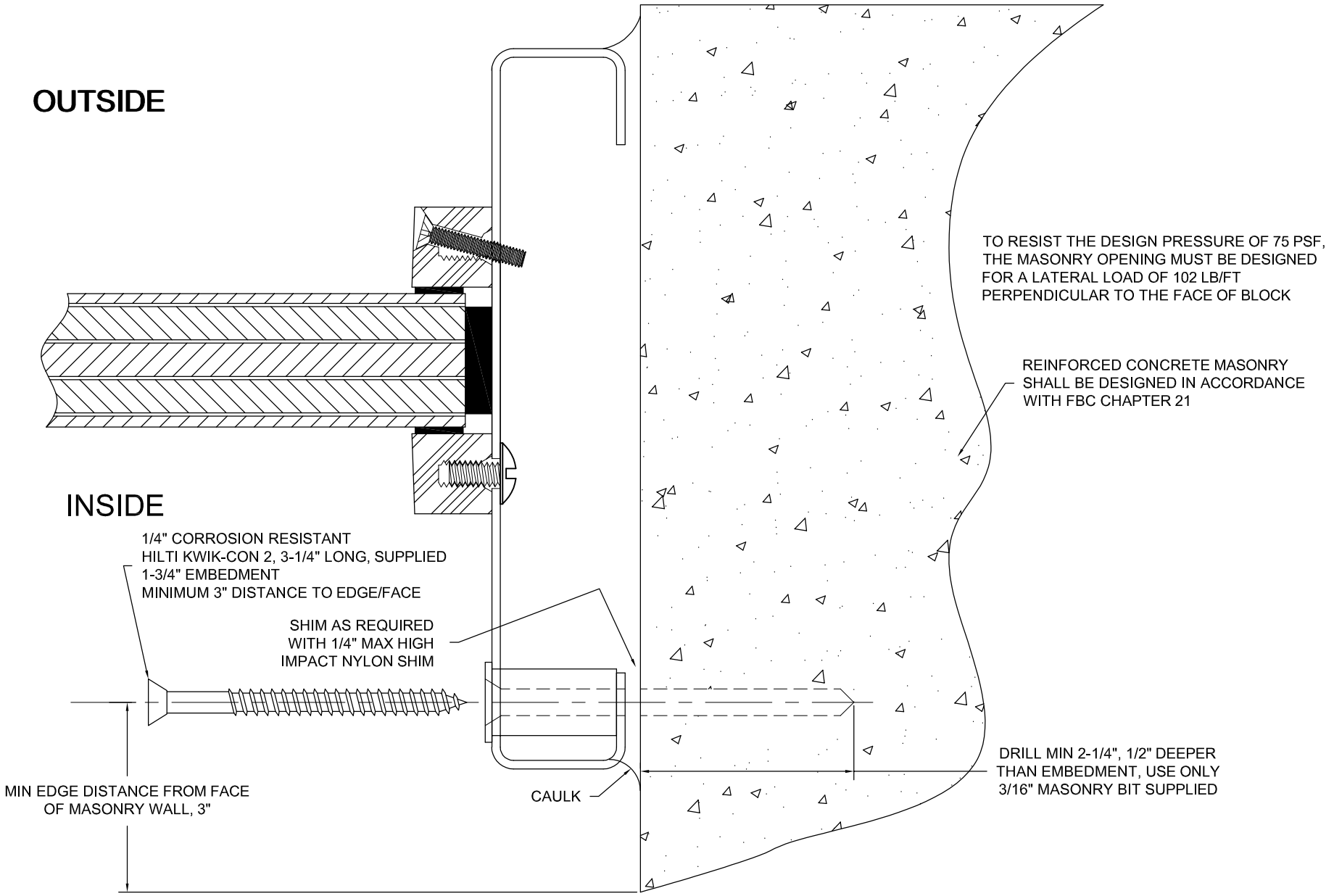

E.F.BAVIS & ASSOC. INC.
201 GRANDIN RD. P.O.BOX 337
MAINEVILLE, OH. 45039 0337
PH 513-677-0500 FAX 513-677-0552

UNLESS OTHERWISE SPECIFIED ALL DIMENSIONS ARE IN INCHES
DECIMALS: .XX + - .01 ; .XXX + - .005 FRACTIONS: + - 1/32; ANGLES: + - 30'
REMOVE ALL BURRS AND SHARP EDGES TO R .02 OR .02 X .02 CHAMFER MAX.

THIS DOCUMENTATION AND INFORMATION CONTAINED ARE THE SOLE PROPERTY OF E.F.BAVIS & ASSOC, INC. IT SHALL BE RETURNED UPON REQUEST AND SHALL NOT BE REPRODUCED IN WHOLE OR IN PART, OR DISCLOSED TO ANYONE ELSE, OR USED, WITHOUT WRITTEN CONSENT OF E.F.BAVIS & ASSOC, INC.

8' FIXED TRIMLESS WINDOW

MODEL	12103996	PAGE	10 OF 15
DWG.	8' WT-HUR	DATE CREATED: 12/16/04	BAP
REV. DATE:			

COPYRIGHT 1996,2002 E.F.Bavis & Assoc. Inc.

FASTENER INSTALLATION DETAIL: METAL, HEAD AND JAMB, FIELD VERIFIED

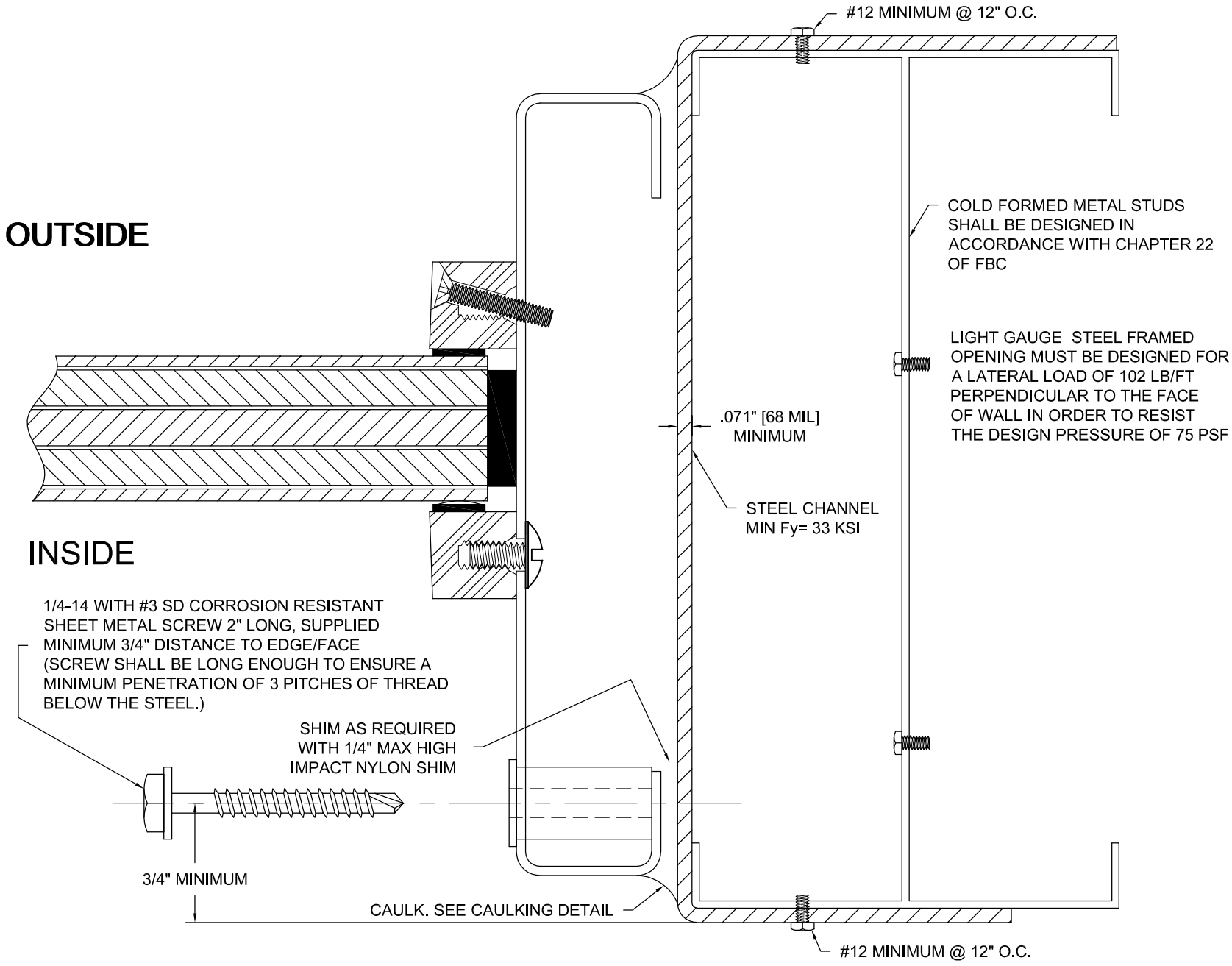

E.F.BAVIS & ASSOC. INC.
201 GRANDIN RD. P.O.BOX 337
MAINEVILLE, OH. 45039 0337
PH 513-677-0500 FAX 513-677-0552

UNLESS OTHERWISE SPECIFIED ALL DIMENSIONS ARE IN INCHES
DECIMALS: .XX + - .01 ; .XXX + - .005 FRACTIONS: + - 1/32; ANGLES: + - 30'
REMOVE ALL BURRS AND SHARP EDGES TO R .02 OR .02 X .02 CHAMFER MAX.

THIS DOCUMENTATION AND INFORMATION CONTAINED ARE THE SOLE PROPERTY OF E.F.BAVIS & ASSOC, INC. IT SHALL BE RETURNED UPON REQUEST AND SHALL NOT BE REPRODUCED IN WHOLE OR IN PART, OR DISCLOSED TO ANYONE ELSE, OR USED, WITHOUT WRITTEN CONSENT OF E.F.BAVIS & ASSOC, INC.

8' FIXED TRIMLESS WINDOW

MODEL	12103996	PAGE	11 OF 15
DWG.	8' WT-HUR	DATE CREATED: 01/24/05	BAP
REV. DATE:			

COPYRIGHT 1996,2002 E.F.Bavis & Assoc. Inc.

FASTENER INSTALLATION DETAIL: WOOD, HEAD AND JAMB, FIELD VERIFIED

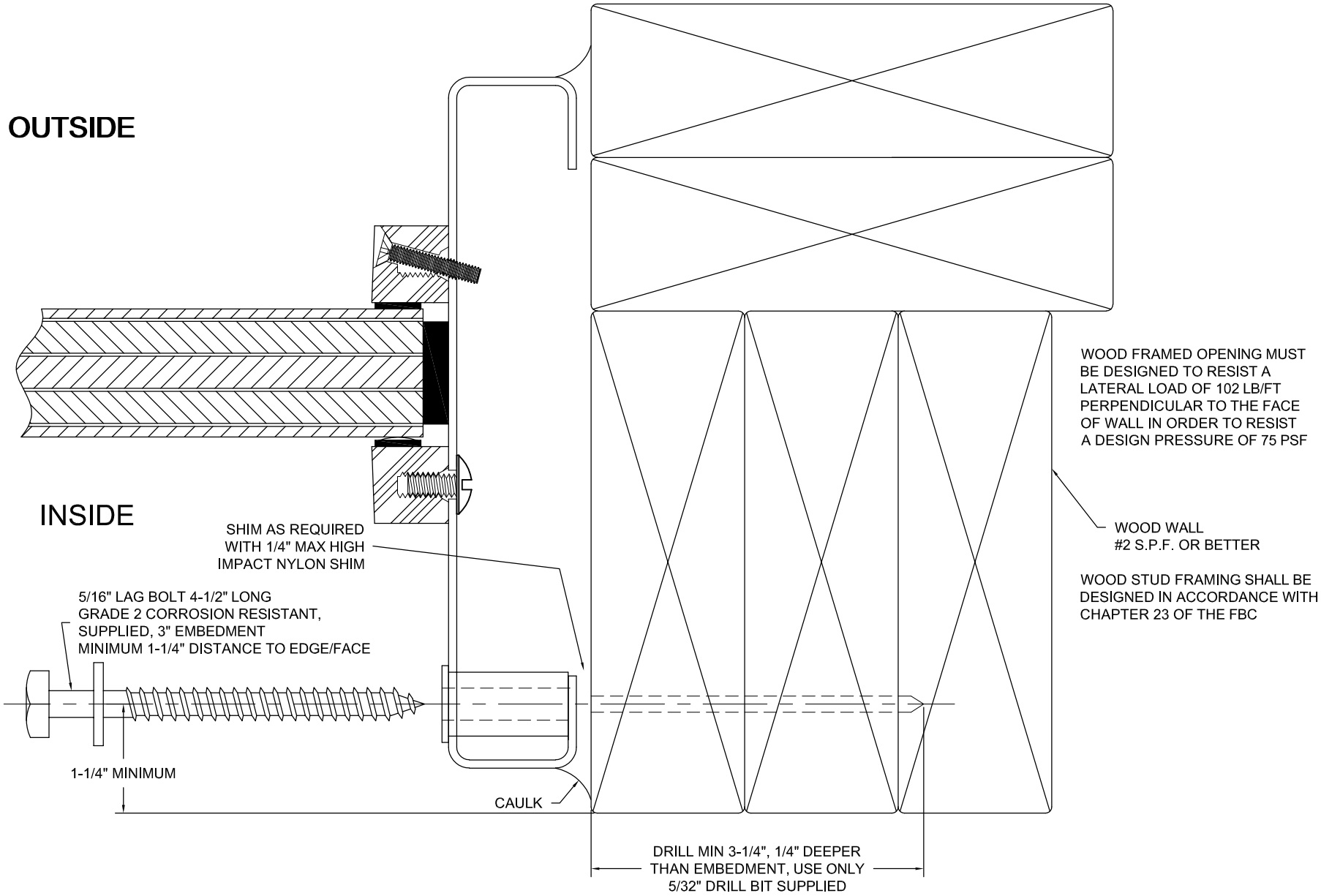

E.F.BAVIS & ASSOC. INC.
201 GRANDIN RD. P.O.BOX 337
MAINEVILLE, OH. 45039 0337
PH 513-677-0500 FAX 513-677-0552

UNLESS OTHERWISE SPECIFIED ALL DIMENSIONS ARE IN INCHES
DECIMALS: .XX + - .01 ; .XXX + - .005 FRACTIONS: + - 1/32; ANGLES: + - 30'
REMOVE ALL BURRS AND SHARP EDGES TO R .02 OR .02 X .02 CHAMFER MAX.

THIS DOCUMENTATION AND INFORMATION CONTAINED ARE THE SOLE PROPERTY OF E.F.BAVIS & ASSOC, INC. IT SHALL BE RETURNED UPON REQUEST AND SHALL NOT BE REPRODUCED IN WHOLE OR IN PART, OR DISCLOSED TO ANYONE ELSE, OR USED, WITHOUT WRITTEN CONSENT OF E.F.BAVIS & ASSOC, INC.

8' FIXED TRIMLESS WINDOW

MODEL	12103996	PAGE	12 OF 15
DWG.	8' WT-HUR	DATE CREATED:	01/24/05 BAP
REV. DATE:			

COPYRIGHT 1996,2002 E.F.Bavis & Assoc. Inc.

FASTENER INSTALLATION DETAIL: SILL, MASONRY WALL, FIELD VERIFIED

TO RESIST THE DESIGN PRESSURE OF 75 PSF, THE MASONRY OPENING MUST BE DESIGNED FOR A LATERAL LOAD OF 102 LB/FT PERPENDICULAR TO THE FACE OF BLOCK

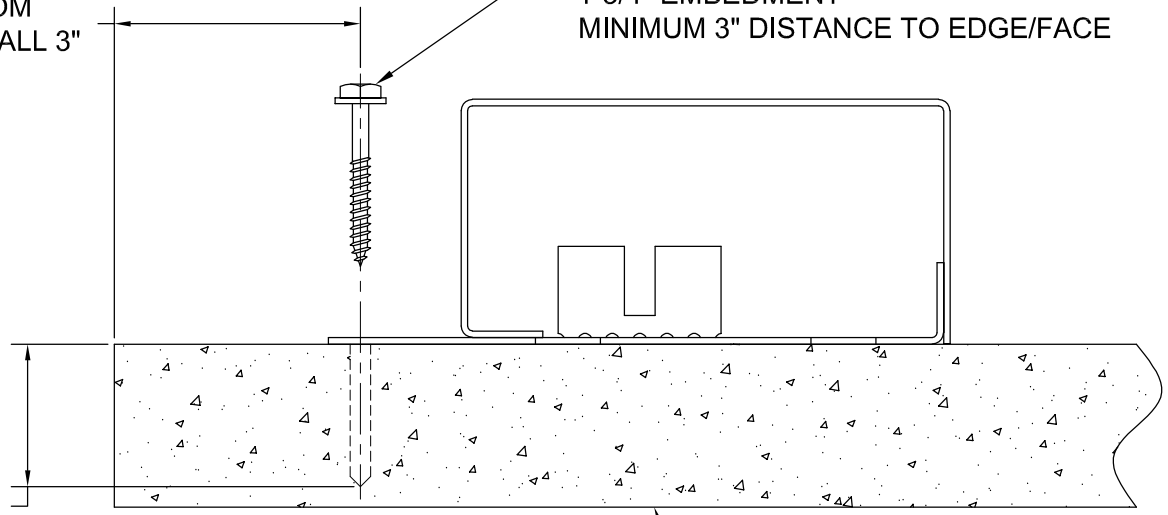

FL 6587.8 R8

E.F.BAVIS & ASSOC. INC.
201 GRANDIN RD. P.O.BOX 337
MAINEVILLE, OH. 45039 0337
PH 513-677-0500 FAX 513-677-0552

UNLESS OTHERWISE SPECIFIED ALL DIMENSIONS ARE IN INCHES
DECIMALS: .XX + - .01 ; .XXX + - .005 FRACTIONS: + - 1/32; ANGLES: + - 30'
REMOVE ALL BURRS AND SHARP EDGES TO R .02 OR .02 X .02 CHAMFER MAX.

THIS DOCUMENTATION AND INFORMATION CONTAINED ARE THE SOLE PROPERTY OF E.F.BAVIS & ASSOC, INC. IT SHALL BE RETURNED UPON REQUEST AND SHALL NOT BE REPRODUCED IN WHOLE OR IN PART, OR DISCLOSED TO ANYONE ELSE, OR USED, WITHOUT WRITTEN CONSENT OF E.F.BAVIS & ASSOC, INC.

8' FIXED TRIMLESS WINDOW

MODEL	12103996	PAGE	13 OF 15
DWG.	8' WT-HUR	DATE CREATED:	01/24/05 BAP
REV. DATE:			

COPYRIGHT 1996,2002 E.F.Bavis & Assoc. Inc.

FASTENER INSTALLATION DETAIL: SILL, METAL WALL, FIELD VERIFIED

COLD FORMED METAL STUDS SHALL BE DESIGNED IN ACCORDANCE WITH CHAPTER 22 OF FBC

LIGHT GAUGE STEEL FRAMED OPENING MUST BE DESIGNED FOR A LATERAL LOAD OF 102 LB/FT PERPENDICULAR TO THE FACE OF WALL IN ORDER TO RESIST THE DESIGN PRESSURE OF 75 PSF

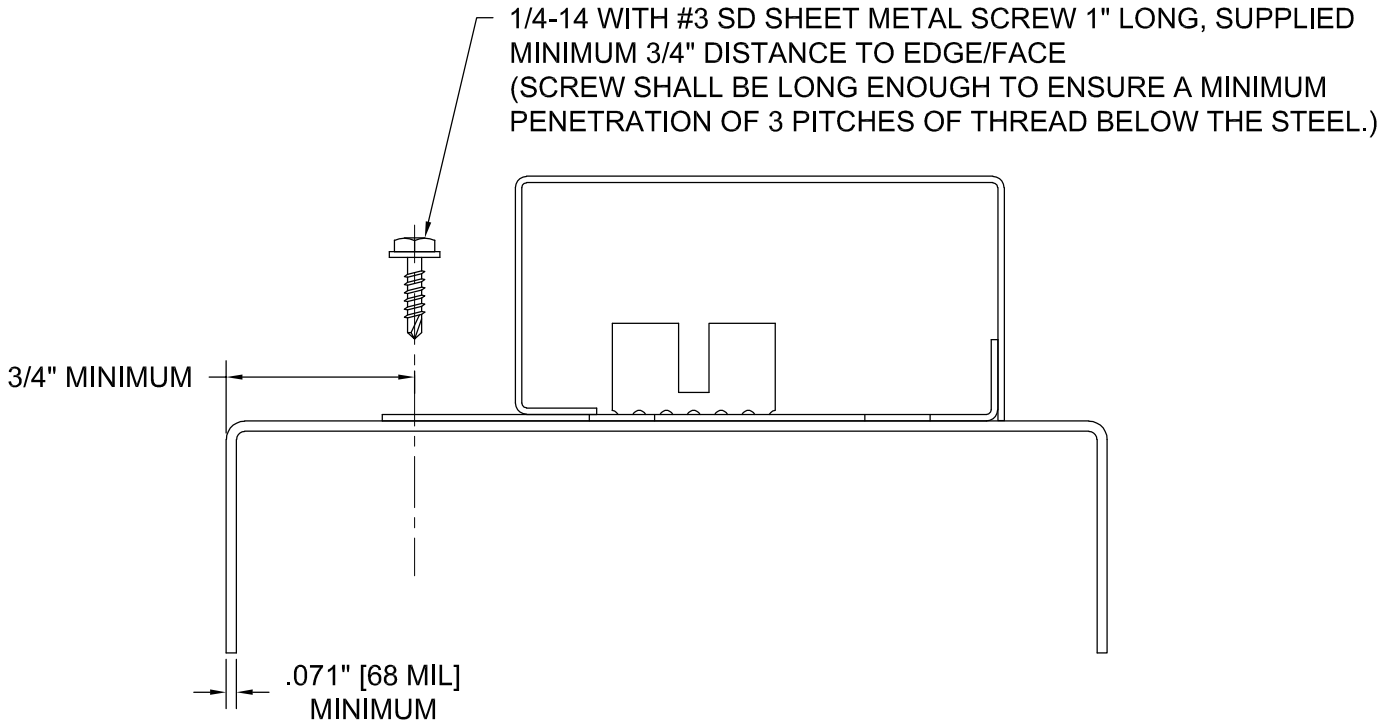

E.F.BAVIS & ASSOC. INC.
201 GRANDIN RD. P.O.BOX 337
MAINEVILLE, OH. 45039 0337
PH 513-677-0500 FAX 513-677-0552

UNLESS OTHERWISE SPECIFIED ALL DIMENSIONS ARE IN INCHES
DECIMALS: .XX + - .01 ; .XXX + - .005 FRACTIONS: + - 1/32; ANGLES: + - 30'
REMOVE ALL BURRS AND SHARP EDGES TO R .02 OR .02 X .02 CHAMFER MAX.

THIS DOCUMENTATION AND INFORMATION CONTAINED ARE THE SOLE PROPERTY OF E.F.BAVIS & ASSOC, INC. IT SHALL BE RETURNED UPON REQUEST AND SHALL NOT BE REPRODUCED IN WHOLE OR IN PART, OR DISCLOSED TO ANYONE ELSE, OR USED, WITHOUT WRITTEN CONSENT OF E.F.BAVIS & ASSOC, INC.

8' FIXED TRIMLESS WINDOW

MODEL	12103996	PAGE	14 OF 15
DWG.	8' WT-HUR	DATE CREATED:	01/24/05 BAP
REV. DATE:			

COPYRIGHT 1996,2002 E.F.Bavis & Assoc. Inc.

FASTENER INSTALLATION DETAIL: SILL, WOOD WALL, FIELD VERIFIED

WOOD FRAMED OPENING MUST BE DESIGNED TO RESIST A LATERAL LOAD OF 102 LB/FT PERPENDICULAR TO THE FACE OF WALL IN ORDER TO RESIST A DESIGN PRESSURE OF 75 PSF

WOOD STUD FRAMING SHALL BE DESIGNED IN ACCORDANCE WITH CHAPTER 23 OF THE FBC

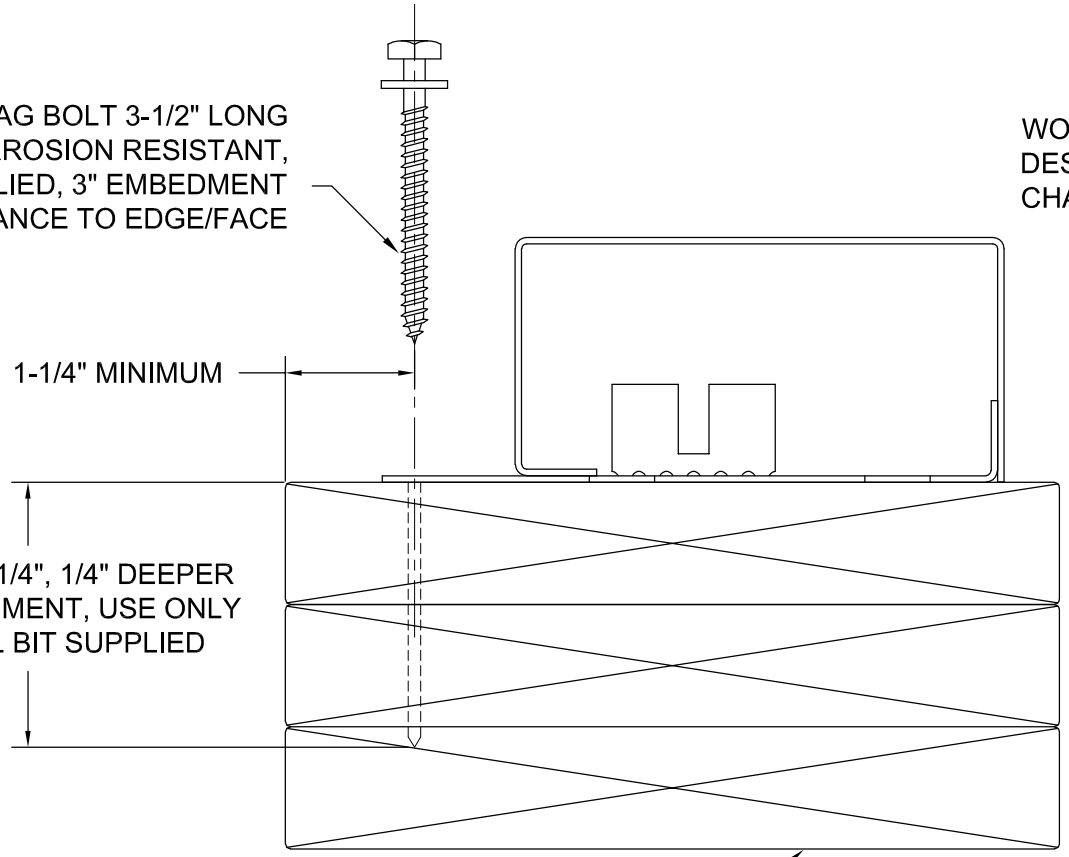

E.F.BAVIS & ASSOC. INC.
201 GRANDIN RD. P.O.BOX 337
MAINEVILLE, OH. 45039 0337
PH 513-677-0500 FAX 513-677-0552

UNLESS OTHERWISE SPECIFIED ALL DIMENSIONS ARE IN INCHES
DECIMALS: .XX + - .01 ; .XXX + - .005 FRACTIONS: + - 1/32; ANGLES: + - 30'
REMOVE ALL BURRS AND SHARP EDGES TO R .02 OR .02 X .02 CHAMFER MAX.

THIS DOCUMENTATION AND INFORMATION CONTAINED ARE THE SOLE PROPERTY OF E.F.BAVIS & ASSOC. INC. IT SHALL BE RETURNED UPON REQUEST AND SHALL NOT BE REPRODUCED IN WHOLE OR IN PART, OR DISCLOSED TO ANYONE ELSE, OR USED, WITHOUT WRITTEN CONSENT OF E.F.BAVIS & ASSOC, INC.

8' FIXED TRIMLESS WINDOW

MODEL	12103996	PAGE	15 OF 15
DWG.	8' WT-HUR	DATE CREATED:	01/24/05 BAP
REV. DATE:	06/27/08	MJC	COPYRIGHT 1996,2002 E.F.Bavis & Assoc. Inc.
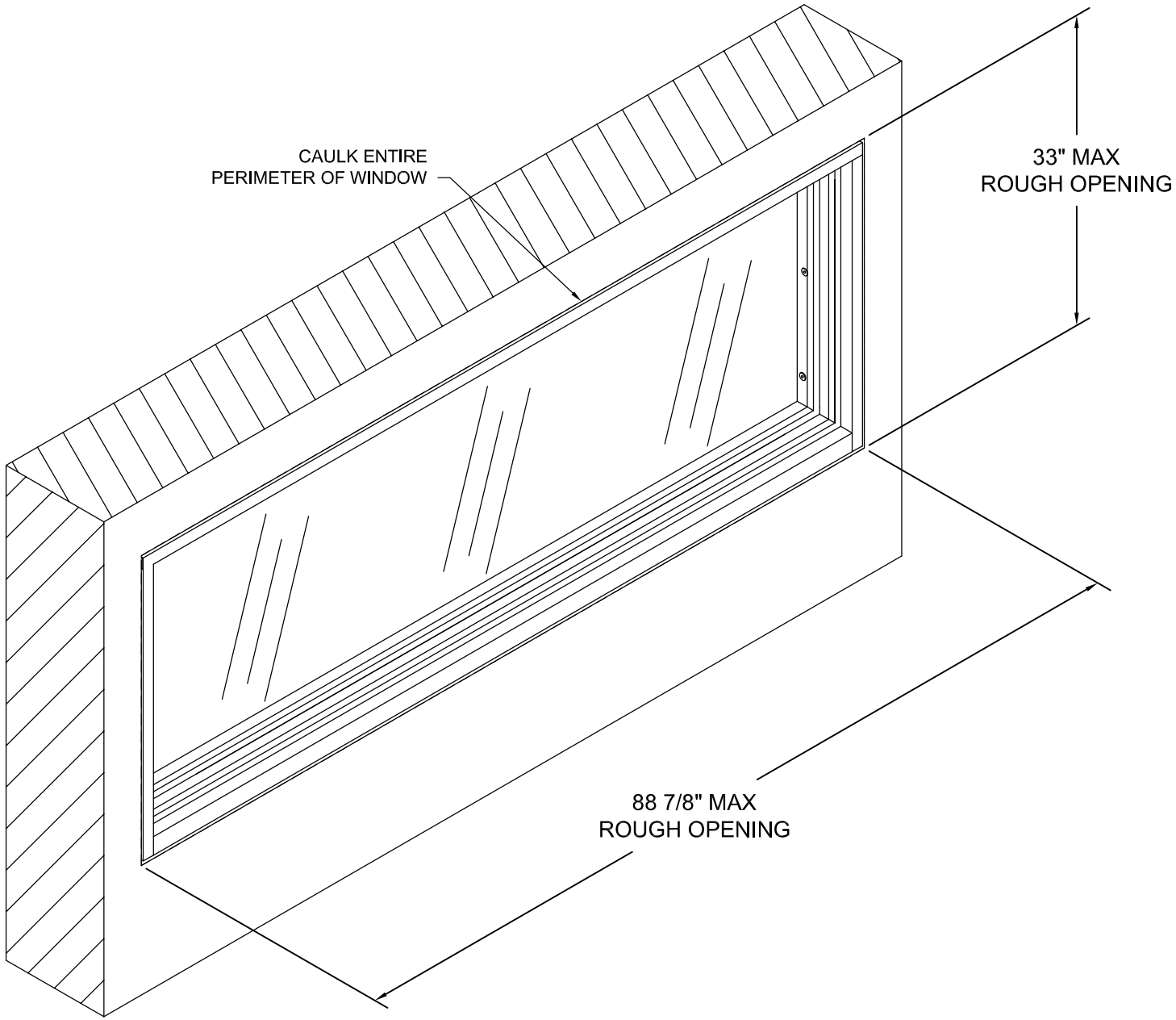
FINISH CAULKING, FIELD VERIFIED